Roundhouse 'Billy' smokebox & chimney

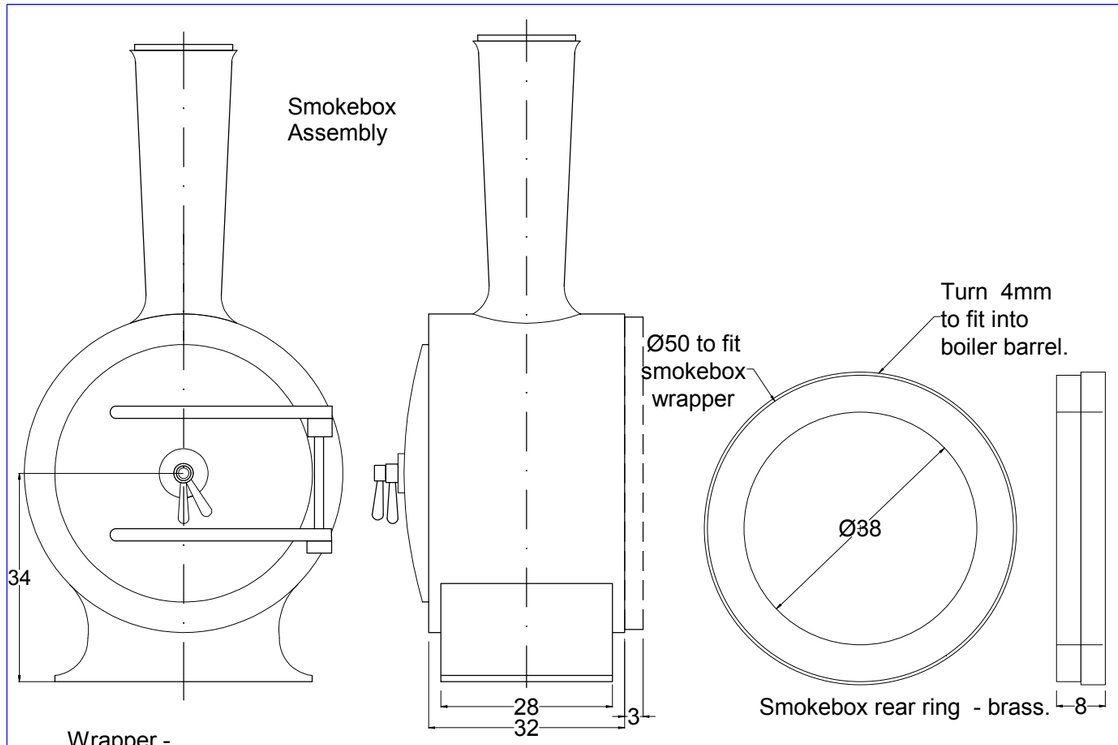

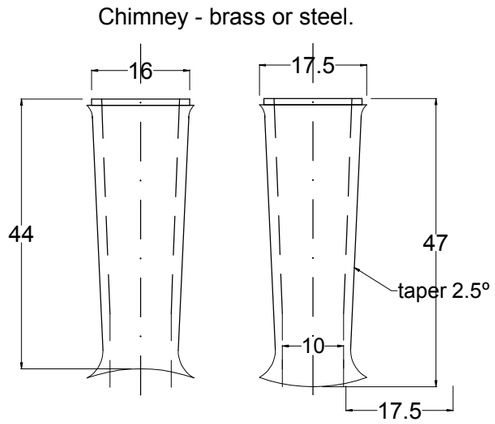

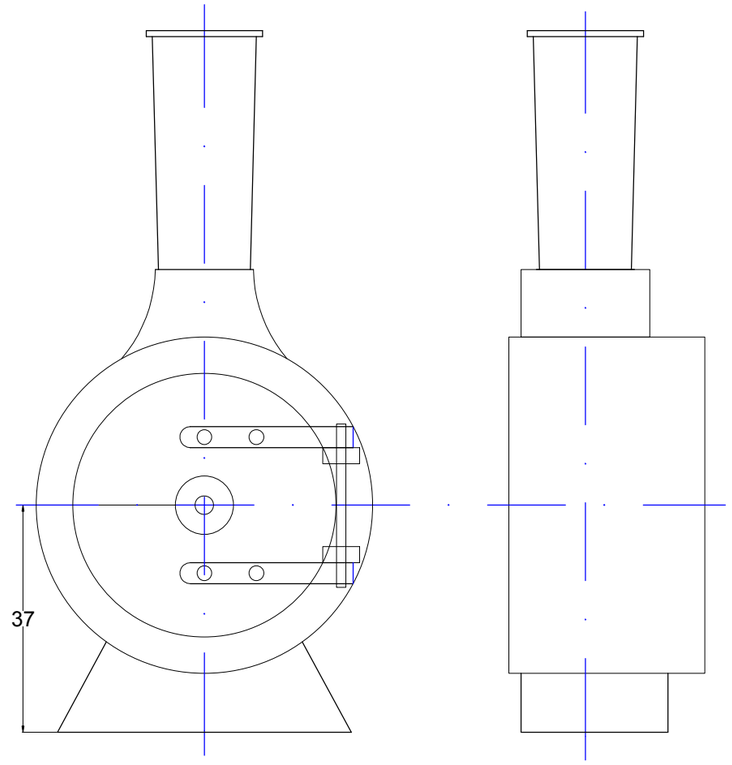

NB. Using a Billy smokebox raises the boiler centre line 3mm above scale height.

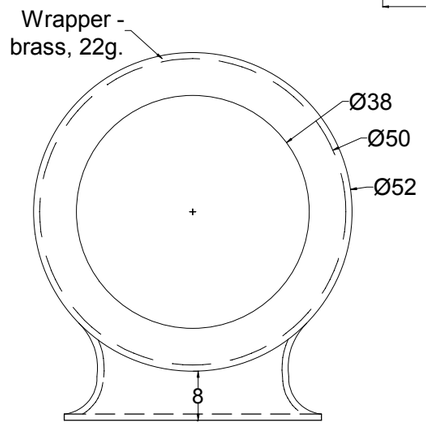

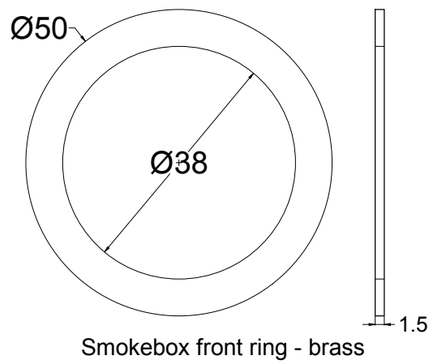

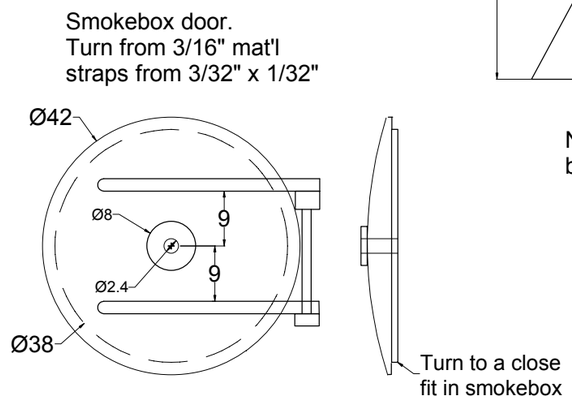

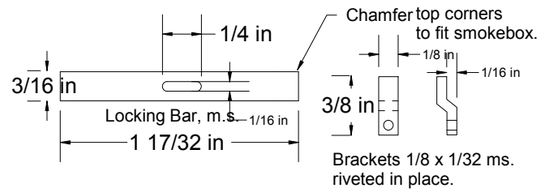

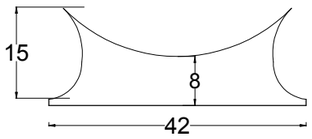

Saddle front - 22g brass

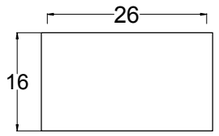

Saddle side -
brass - 22g.
Bend to shape.

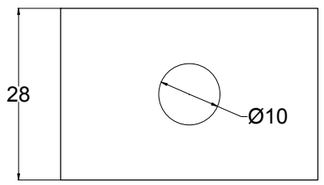

Saddle base - 22g brass

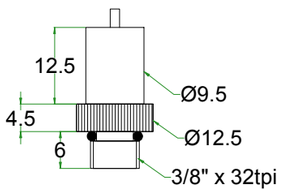

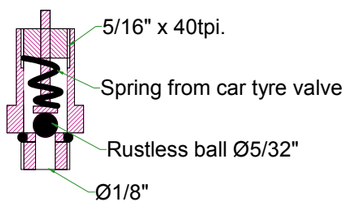

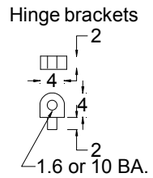

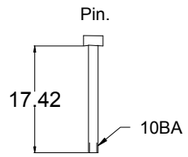

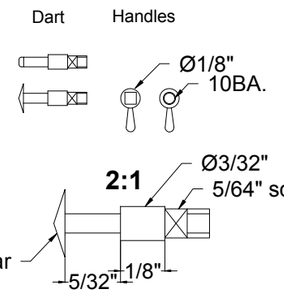

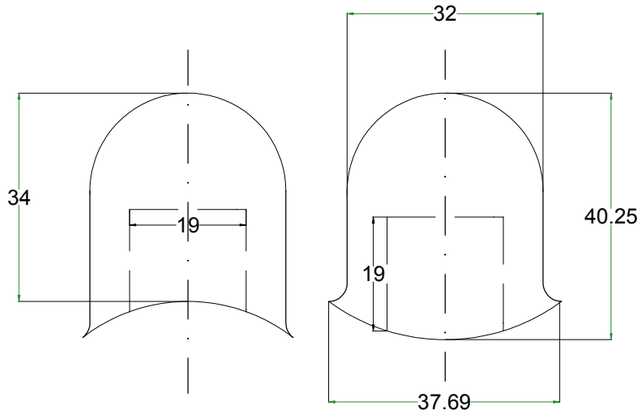

ISIBUTU 06 Smokebox etc.	FILENAME - 06 Smokebox.tcw	Projection 3rd Angle.	Drawn by - Keith Bucklitch (c) NB. All dimensions in mm unless otherwise stated.	Date - 7 January 2007 Rev. December 08	Sheet No - Sheet 06 of 8